Work Order ID 115371

Thursday, March 27, 2014 3:40:25 PM

D500-560-041 B115371 *115371* Ship April

Item ID: D500-560-041 **Accept** *N900040100* **Setup Start** *NS1*

Revision ID:

Item Name: Cargo Mirror Installation **Stop** *NS2*

Start Date: 3/27/2014 **Start Qty:** 8.00 *8* **Cust Item ID:**

Required Date: 4/4/2014 **Req'd Qty:** 8.00 *8* **Customer:**

Reference:

Approvals: **Process Plan:** MF **Date:** 14-3-27 **Tooling:** _____ **Date:** _____ **Run Start** *NR1*

QC: _____ **Date:** _____ **SPC (Y/N):** _____ **Date:** _____ **Stop** *NR2*

Sequence ID/ Work Center ID	Operation Description	Set Up/ Run Hours	Tool ID	Tool #	Plan Code	Accept Qty	Reject Qty	Reject Number	Insp. Stamp
Draw Nbr: N/A / Revision Nbr: Rev D									
100	Document Control	0.00							
100	DOCUMENT CONTROL				DAS 31 9-89	14-04-3	8	8x	MLJ 14-03-3
DC	**Memo**	0.00							
Doc.Control -USB or Paperwork	Photocopy bluefile and create labels as per PPP D500-560-041 CHG006								
110		0.00							
110	Small Fab					8			FF 14-04-02
Small Fab	**Memo**	0.00							
Small Fab	Before assembly repass tap on stud. Assemble as per drawing D500-560 PAGE 8- BLUE FILE								
120	QC5- Inspect part completeness to step on W/O	0.00			DAS 27 9-89				
120						8			
QC	**Memo**	0.00							
Quality Control					14/4/3				

DQA: _____ Date: _____

WORK ORDER NON-CONFORMANCE / UPDATE

DART AEROSPACE

QA Closed: Date: Work Order update only ☐

Work Order: _____

Part No. _____

NCR No. _____

DISPOSITION

Rework ☐
Scrap ☐
Use-as-is ☐
Suspected Unapproved ☐

AGAINST DEPARTMENT/PROCESS

Skid-tube ☐ Crosstube ☐ Water Jet ☐ Engineering ☐
Machining ☐ Small Fab ☐ Prod. Eng. Coor. ☐ Quality ☐
Thermoforming ☐ Finishing ☐ Rec/Store/Packaging ☐ Other ☐
Large Fab ☐ Composite ☐ Supplier ☐

Root Cause		Date	Step	Qty	Description of work order update or non-conformance	Initial Chief Eng	Action Description	Sign & Date	Verification	QC Inspector
Design	☐									
Doc/Data	☐									
Equip/Tooling	☐									
Handling/Pre	☐									
Material	☐									
Operator	☐									
Offset/Setup	☐									
Process	☐									
Supplier	☐									
Training	☐									
Transport	☐									
Unapproved	☐									

FAULT CATEGORY

Landing Gear

☐ Bending
☐ Centre Not Concentric
☐ Cracks
☐ Crimp/Kink/Ripple/Wave
☐ Cuffs
☐ Crushing
☐ Heat Treat
☐ Inspection Strip in Tube
☐ Marks/Chatter
☐ Turning Sequence
☐ Wave/Twist in Tube

General

☐ Bend
☐ BOM/Route
☐ Broken/Damage/Defect
☐ Burrs
☐ Contamination
☐ Countersink
☐ Cut Too Short
☐ Drawing
☐ Drill Holes
☐ Finish
☐ Fit/Function

☐ Folio/Program
☐ Grain
☐ Hardware
☐ Inspection Incomplete/Unqualified
☐ Instructions Incomplete/Unclear
☐ Misaligned/off center
☐ Mislabeled
☐ Misread
☐ Off-set
☐ Out of Calibration
☐ Out of Sequence

☐ Outside Dimensions
☐ Over/Under tolerance
☐ Part Incorrect
☐ Part Lost/Missing
☐ Part Moved
☐ Positioned Wrong
☐ Power Loss/Surge

☐ Pressure/Forced
☐ Set-up
☐ Temperature/Cure
☐ Weld
☐ Wrong Stock Pulled

☐ Other

_____
_____
_____

Item ID: D500-560-041 **Accept** *N9000040100* **Setup Start** *NS1*
Revision ID: **Stop** *NS2*
Item Name: Cargo Mirror Installation
Start Date: 3/27/2014 **Start Qty:** 8.00 *8*
Required Date: 4/4/2014 **Req'd Qty:** 8.00 *8*
Reference:
Cust Item ID:
Customer:

Approvals: **Process Plan:** _____ **Date:** _____ **Tooling:** _____ **Date:** _____
QC: _____ **Date:** _____ **SPC (Y/N):** _____ **Date:** _____

Run Start *NR1*
Stop *NR2*

Sequence ID/ Work Center ID	Operation Description	Set Up/ Run Hours	Tool ID	Tool #	Plan Code	Accept Qty	Reject Qty	Reject Number	Insp. Stamp
130	Pick Kit	0.00				8x		74-3-3	DAS 26 9-89
130									
Packaging	**Memo**	0.00				8x		6/4/3	DAS 32 9-89
Packaging									
140	QC4- 100% Inspect kits for completeness	0.00							DAS 31 9-89
140						APR 0 3 2014	8x		
QC	**Memo**	0.00							
Quality Control									
150		0.00							
150	Packaging								
Packaging	**Memo**	0.00				APR 0 3 2014		8x	DAS 9-89
Packaging	Identify and pack for shipping as per PPP D500-560-041								
	Location: Ship								
	PPP Rev:								

DQA: _____ Date: _____

WORK ORDER NON-CONFORMANCE / UPDATE

QA Closed: Date: Work Order update only ☐

Work Order: _____

Part No. _____

NCR No. _____

DISPOSITION

Rework	☐
Scrap	☐
Use-as-is	☐
Suspected Unapproved	☐

AGAINST DEPARTMENT/PROCESS

Skid-tube	☐	Crosstube	☐	Water Jet	☐	Engineering	☐
Machining	☐	Small Fab	☐	Prod. Eng. Coor.	☐	Quality	☐
Thermoforming	☐	Finishing	☐	Rec/Store/Packaging	☐	Other	☐
Large Fab	☐	Composite	☐	Supplier	☐		☐

Root Cause		Date	Step	Qty	Description of work order update or non-conformance	Initial Chief Eng	Action Description	Sign & Date	Verification	QC Inspector
Design	☐									
Doc/Data	☐									
Equip/Tooling	☐									
Handling/Pre	☐									
Material	☐									
Operator	☐									
Offset/Setup	☐									
Process	☐									
Supplier	☐									
Training	☐									
Transport	☐									
Unapproved	☐									

FAULT CATEGORY

Landing Gear

☐	Bending
☐	Centre Not Concentric
☐	Cracks
☐	Crimp/Kink/Ripple/Wave
☐	Cuffs
☐	Crushing
☐	Heat Treat
☐	Inspection Strip in Tube
☐	Marks/Chatter
☐	Turning Sequence
☐	Wave/Twist in Tube

General

☐	Bend
☐	BOM/Route
☐	Broken/Damage/Defect
☐	Burrs
☐	Contamination
☐	Countersink
☐	Cut Too Short
☐	Drawing
☐	Drill Holes
☐	Finish
☐	Fit/Function
☐	Folio/Program
☐	Grain
☐	Hardware
☐	Inspection Incomplete/Unqualified
☐	Instructions Incomplete/Unclear
☐	Misaligned/off center
☐	Mislabeled
☐	Misread
☐	Off-set
☐	Out of Calibration
☐	Out of Sequence
☐	Outside Dimensions
☐	Over/Under tolerance
☐	Part Incorrect
☐	Part Lost/Missing
☐	Part Moved
☐	Positioned Wrong
☐	Power Loss/Surge
☐	Pressure/Forced
☐	Set-up
☐	Temperature/Cure
☐	Weld
☐	Wrong Stock Pulled
☐	Other

_____

_____

_____

Item ID: D500-560-041 **Accept** *N9000401 00* **Setup Start** *NS1*
Revision ID: **Stop** *NS2*
Item Name: Cargo Mirror Installation
Start Date: 3/27/2014 **Start Qty:** 8.00 *8*
Required Date: 4/4/2014 **Req'd Qty:** 8.00 *8*
Reference:
Cust Item ID:
Customer:

Approvals: **Process Plan:** _____ **Date:** _____ **Tooling:** _____ **Date:** _____ **Run Start** *NR1*
QC: _____ **Date:** _____ **SPC (Y/N):** _____ **Date:** _____ **Stop** *NR2*

Sequence ID/ Work Center ID	Operation Description	Set Up/ Run Hours	Tool ID	Tool #	Plan Code	Accept Qty	Reject Qty	Reject Number	Insp. Stamp
160	QC21- Final Inspection - Work Order Release	0.00							
160									
QC	**Memo**	0.00							
Quality Control									

14-04-3

14-04-03

DQA: _____ Date: _____

WORK ORDER NON-CONFORMANCE / UPDATE

DART AEROSPACE

QA Closed: Date: Work Order update only ☐

Work Order: _____

Part No. _____

NCR No. _____

DISPOSITION

Rework ☐
Scrap ☐
Use-as-is ☐
Suspected Unapproved ☐

AGAINST DEPARTMENT/PROCESS

Skid-tube ☐ Crosstube ☐ Water Jet ☐ Engineering ☐
Machining ☐ Small Fab ☐ Prod. Eng. Coor. ☐ Quality ☐
Thermoforming ☐ Finishing ☐ Rec/Store/Packaging ☐ Other ☐
Large Fab ☐ Composite ☐ Supplier ☐ ☐

Root Cause		Date	Step	Qty	Description of work order update or non-conformance	Initial Chief Eng	Action Description	Sign & Date	Verification	QC Inspector
Design	☐									
Doc/Data	☐									
Equip/Tooling	☐									
Handling/Pre	☐									
Material	☐									
Operator	☐									
Offset/Setup	☐									
Process	☐									
Supplier	☐									
Training	☐									
Transport	☐									
Unapproved	☐									

FAULT CATEGORY

Landing Gear

☐ Bending
☐ Centre Not Concentric
☐ Cracks
☐ Crimp/Kink/Ripple/Wave
☐ Cuffs
☐ Crushing
☐ Heat Treat
☐ Inspection Strip in Tube
☐ Marks/Chatter
☐ Turning Sequence
☐ Wave/Twist in Tube

General

☐ Bend
☐ BOM/Route
☐ Broken/Damage/Defect
☐ Burrs
☐ Contamination
☐ Countersink
☐ Cut Too Short
☐ Drawing
☐ Drill Holes
☐ Finish
☐ Fit/Function
☐ Folio/Program
☐ Grain
☐ Hardware
☐ Inspection Incomplete/Unqualified
☐ Instructions Incomplete/Unclear
☐ Misaligned/off center
☐ Mislabeled
☐ Misread
☐ Off-set
☐ Out of Calibration
☐ Out of Sequence
☐ Outside Dimensions
☐ Over/Under tolerance
☐ Part Incorrect
☐ Part Lost/Missing
☐ Part Moved
☐ Positioned Wrong
☐ Power Loss/Surge
☐ Pressure/Forced
☐ Set-up
☐ Temperature/Cure
☐ Weld
☐ Wrong Stock Pulled
☐ Other

_____
_____
_____

Picklist Print

Thursday, March 27, 2014 3:40:24 PM

Work Order ID: 115371 *115371*

Parent Item: D500-560-041 *D500-560-041*

Parent Item Name: Cargo Mirror Installation

Start Date: 3/27/2014 **Required Date:** 4/4/2014

Start Qty: 8.00 **Required Qty:** 8.00

Comments: IPP Rev:E03.10.15Reformat; Removed D2057KJ/RF
IPP Rev:F 08-05-27 as per ECN1195p DD verified by:EC IPP Rev:G
10.04.22 chg route seq DD verified by:EC

Component Item ID / Item Name	Replacement Item ID	Mfg/ Purch	Bin Item	Primary Location	Last Location	Route Seq ID	Unit of Measure	Qty on Hand	Qty per Kit	Total Qty	Qty Issued	Date Issued	Status
AN3-4A		Purchased	No			140	Each	328.0000	4	32			
AN3-4A Bolt									**	40 128634			

Location		Loc Qty	Loc Code
ST350		200	
	m128429	100	
	m128634	100	
ST511		128	
	m127044	128	

DAS 31 9-89

AN526C1032R10		Purchased	No			110	Each	31.0000	4	32			
AN526C1032R10 Screw									**	FF 14-04-02			

Location		Loc Qty	Loc Code
FP001	128712	26	
	108062	26	
ST346		5	
	m126857	5	

32

D1048		Manufactured	No			110	Each	10.0000	2	16			
D1048 Clamp									**	FF 14-04-02 ~~14 3 37~~			

Location		Loc Qty	Loc Code
GA	115372	10	
	106093	10	

60

12

DQA: _____ Date: _____

DART AEROSPACE

WORK ORDER NON-CONFORMANCE / UPDATE

QA Closed: Date: Work Order update only ☐

Work Order: _____

Part No. _____

NCR No. _____

DISPOSITION

Rework ☐
Scrap ☐
Use-as-is ☐
Suspected Unapproved ☐

AGAINST DEPARTMENT/PROCESS

Skid-tube ☐ Crosstube ☐ Water Jet ☐ Engineering ☐
Machining ☐ Small Fab ☐ Prod. Eng. Coor. ☐ Quality ☐
Thermoforming ☐ Finishing ☐ Rec/Store/Packaging ☐ Other ☐
Large Fab ☐ Composite ☐ Supplier ☐

Root Cause		Date	Step	Qty	Description of work order update or non-conformance	Initial Chief Eng	Action Description	Sign & Date	Verification	QC Inspector
Design	☐									
Doc/Data	☐									
Equip/Tooling	☐									
Handling/Pre	☐									
Material	☐									
Operator	☐									
Offset/Setup	☐									
Process	☐									
Supplier	☐									
Training	☐									
Transport	☐									
Unapproved	☐									

FAULT CATEGORY

Landing Gear

☐ Bending
☐ Centre Not Concentric
☐ Cracks
☐ Crimp/Kink/Ripple/Wave
☐ Cuffs
☐ Crushing
☐ Heat Treat
☐ Inspection Strip in Tube
☐ Marks/Chatter
☐ Turning Sequence
☐ Wave/Twist in Tube

General

☐ Bend
☐ BOM/Route
☐ Broken/Damage/Defect
☐ Burrs
☐ Contamination
☐ Countersink
☐ Cut Too Short
☐ Drawing
☐ Drill Holes
☐ Finish
☐ Fit/Function

☐ Folio/Program
☐ Grain
☐ Hardware
☐ Inspection Incomplete/Unqualified
☐ Instructions Incomplete/Unclear
☐ Misaligned/off center
☐ Mislabeled
☐ Misread
☐ Off-set
☐ Out of Calibration
☐ Out of Sequence

☐ Outside Dimensions
☐ Over/Under tolerance
☐ Part Incorrect
☐ Part Lost/Missing
☐ Part Moved
☐ Positioned Wrong
☐ Power Loss/Surge

☐ Pressure/Forced
☐ Set-up
☐ Temperature/Cure
☐ Weld
☐ Wrong Stock Pulled

☐ Other

_____
_____
_____

Picklist Print

Thursday, March 27, 2014 3:40:25 PM

Work Order ID: 115371 *115371*

Parent Item: D500-560-041 *D500-560-041*

Parent Item Name: Cargo Mirror Installation

Start Date: 3/27/2014 **Required Date:** 4/4/2014

Start Qty: 8.00 **Required Qty:** 8.00

D1049	Manufactured	No	110	Each	34.0000	2	16	DAS 26 9-89

D1049

Saddle

Location		Loc Qty	Loc Code
GA		34	
	108735	4	2x
	112242	20	4x
	99603	10	10x

D2010-101	Manufactured	No	110	Each	28.0000	1	8	DAS 26 9-89

D2010-101

Mirror Bracket 369/500

Location		Loc Qty	Loc Code
ST220		28	
	104401	3	3x
	105122	24	4x
	98507	1	1x

D2010-103	Manufactured	No	110	Each	1.0000	1	8	DAS 26 9-89

D2010-103

Mirror Arm 369/500

FF 14-04-02

Location		Loc Qty	Loc Code
ST220	104979	1	7
	104241	1	1X

D2011-101	Manufactured	No	110	Each	43.0000	1	8	DAS 26 9-89

D2011-101

Mirror 6"

14-3-31

Location		Loc Qty	Loc Code
FG		2	
	106348	2	
ST179		41	
	110655	16	8x
	113569	25	

DQA: _____ Date: _____

WORK ORDER NON-CONFORMANCE / UPDATE

QA Closed: Date: Work Order update only ☐

Work Order: _____

Part No. _____

NCR No. _____

DISPOSITION

Rework ☐
Scrap ☐
Use-as-is ☐
Suspected Unapproved ☐

AGAINST DEPARTMENT/PROCESS

Skid-tube ☐ Crosstube ☐ Water Jet ☐ Engineering ☐
Machining ☐ Small Fab ☐ Prod. Eng. Coor. ☐ Quality ☐
Thermoforming ☐ Finishing ☐ Rec/Store/Packaging ☐ Other ☐
Large Fab ☐ Composite ☐ Supplier ☐

Root Cause		Date	Step	Qty	Description of work order update or non-conformance	Initial Chief Eng	Action Description	Sign & Date	Verification	QC Inspector
Design	☐									
Doc/Data	☐									
Equip/Tooling	☐									
Handling/Pre	☐									
Material	☐									
Operator	☐									
Offset/Setup	☐									
Process	☐									
Supplier	☐									
Training	☐									
Transport	☐									
Unapproved	☐									

FAULT CATEGORY

Landing Gear

☐ Bending
☐ Centre Not Concentric
☐ Cracks
☐ Crimp/Kink/Ripple/Wave
☐ Cuffs
☐ Crushing
☐ Heat Treat
☐ Inspection Strip in Tube
☐ Marks/Chatter
☐ Turning Sequence
☐ Wave/Twist in Tube

General

☐ Bend
☐ BOM/Route
☐ Broken/Damage/Defect
☐ Burrs
☐ Contamination
☐ Countersink
☐ Cut Too Short
☐ Drawing
☐ Drill Holes
☐ Finish
☐ Fit/Function
☐ Folio/Program
☐ Grain
☐ Hardware
☐ Inspection Incomplete/Unqualified
☐ Instructions Incomplete/Unclear
☐ Misaligned/off center
☐ Mislabeled
☐ Misread
☐ Off-set
☐ Out of Calibration
☐ Out of Sequence
☐ Outside Dimensions
☐ Over/Under tolerance
☐ Part Incorrect
☐ Part Lost/Missing
☐ Part Moved
☐ Positioned Wrong
☐ Power Loss/Surge
☐ Pressure/Forced
☐ Set-up
☐ Temperature/Cure
☐ Weld
☐ Wrong Stock Pulled
☐ Other

_____
_____
_____

REFERENCE ONLY DAS 31 14-04-3

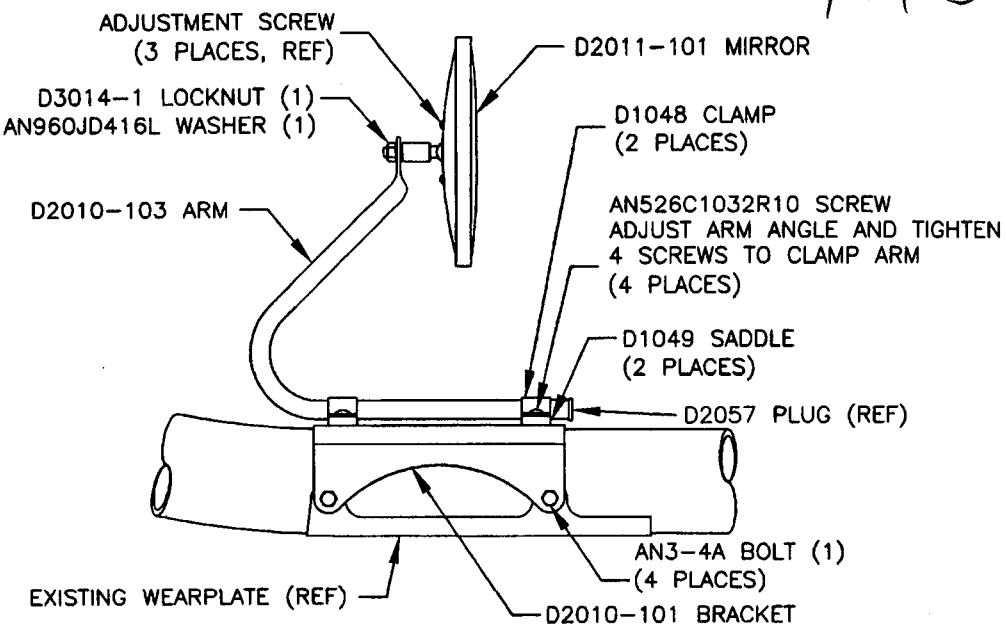

Figure 2: Installation of D500-560-041 Cargo Mirror Assembly

4. WEIGHT AND BALANCE

Installation	Weight	LATERAL		LONGITUDINAL	
		Arm	Moment	Arm	Moment
D500-560-041 Cargo Mirror Assembly	1.0 lb 0.45 kg	-45 in -1.14 m	-45 lb-kg -0.51 m-kg	24 in 0.61 m	24 in-lb 0.27 m-kg

5. PARTS LIST

Qty	Part Number	Description
X	**D500-560-041**	**CARGO MIRROR ASSEMBLY**
1	D2011-101	MIRROR
1	*D3014-1	LOCKNUT
1	*AN960JD416L	WASHER
2	D1048	CLAMP
2	D1049	SADDLE
1	D2010-101	BRACKET
1	D2010-103	ARM
4	AN3-4A	BOLT
4	*AN526C1032R10	SCREW (OR AN526-1032R10)

* PARTS ARE INCLUDED WITH D2011-101 MIRROR

• COPYRIGHT © 1990 BY DART AEROSPACE LTD •
THIS DOCUMENT IS PRIVATE AND CONFIDENTIAL AND IS SUPPLIED ON THE EXPRESS CONDITION THAT IT IS NOT TO BE USED FOR ANY PURPOSE OR COPIED OR COMMUNICATED TO ANY OTHER PERSON WITHOUT WRITTEN PERMISSION FROM DART AEROSPACE LTD.